CURRENT PRODUCTS model:CSP102A

PROGRAM METER

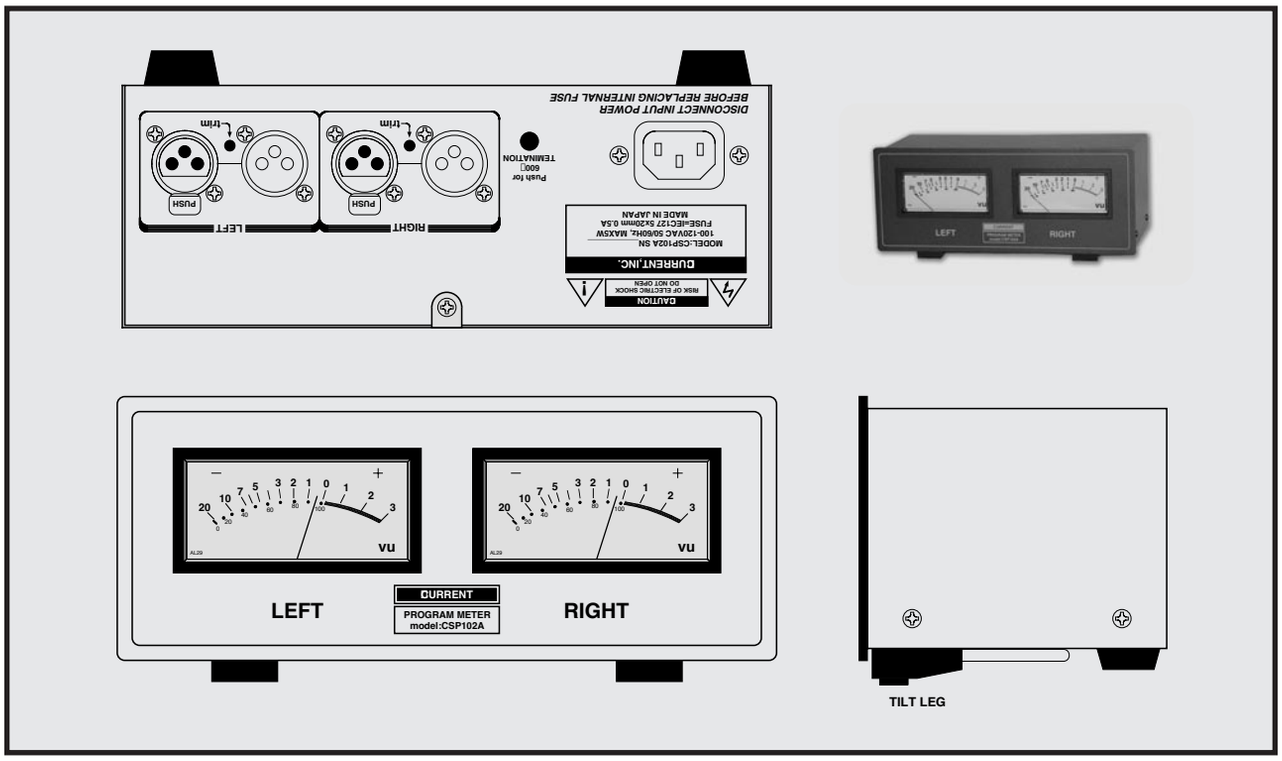

Stereo VU meter
Throughout
600 Ω support
Sifam precision VU meter
Tilt stands
Maintenance-free illumination
-20 to +20dBu reference level
19 inches 2U half

CSP102A is VU meter box using the sifam precision meter. It provides by throughout XLR balance input on and can be available for various applications in a studio or the live.

"VU"

The VU meter implements a sifam made meter used in major large-sized consoles. In addition, 0VU is set in +4dBu in factory, but adjustment of the -20dBu to +20dBu is possible in a trim of the rear panel.

"Input and output"

The input of CSP102A is a female connecter of XLR3, and the throughout is XLR3 male. Even if this maile and female connecter inputs it into whichever because it is connected directly, it can use it. In addition, it can support the 600 Ω line with a switch of the rear panel.

"Meter"

The meter used by default in CSP102A is AL29WF, but there is CSP102A32 of ~~CSP102AF type~~ of the precision and the larger-scale R32AF type more.

"Others"

It can adjust it to the angle that it is easy to see by the tilt stands attached to the bottom of CSP102A. It is possible for the change to name of the panel depending on specifications, but plate-making charges are necessary separately.

It adds a reference level select switch and can also make the type to allow a variable with front panel in a vari mode.

SPECIFICATIONS

- **INPUTS:** BALANCED **INPUT IMPEDANCE:** 20kΩ / 600Ω
- **INPUT CONNECTOR:** XLR3-F x2
- **THRU OUT CONNECTOR:** XLR3-M x2
- **REFERENCE LEVEL:** +4dBu (1.228V)
- **FREQUENCY RESPONSE:** 20~20kHz ±0.5B
- **METERS:** SIFAM AL29WF x2
- **ADJUST:** 0VU ADJUST -20dBu~+20dBu ON REAR PANEL
- **METER LAMP:** AMBER LED
- **MAINS:** 100-120VAC 50/60Hz 3W (200-240V OPTIONAL)
- **DIMENSIONS:** 220Wx88Hx102.6D, 2kg

Standard	CSP102A	¥158,000
~~R22AF meter unit~~	~~CSP102AF~~	~~¥192,000~~
R32AF meter unit	CSP102A32	¥240,000
Custom silk print		¥64,000

accessory : AC cable

The specifications are subject to change without notice.
2-26-11 AKATSUTSUMI, SETAGAYA-KU, TOKYO, 156-0044 JAPAN

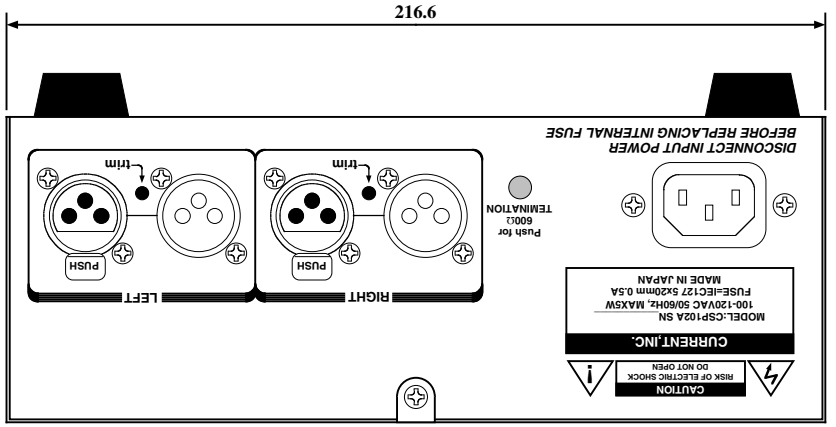

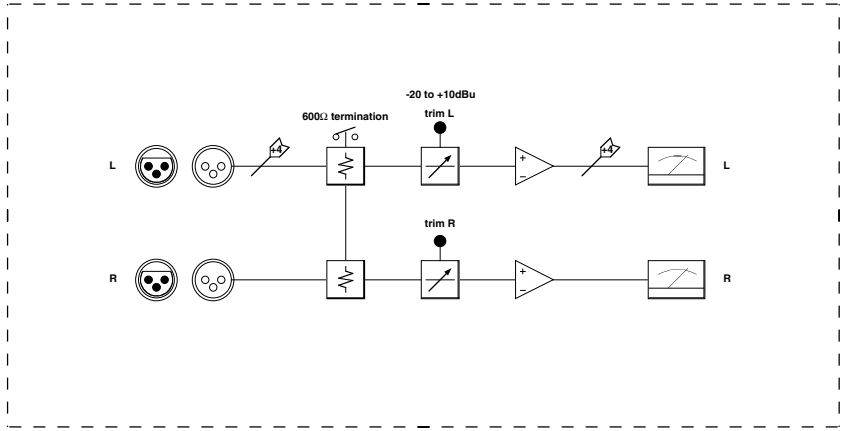

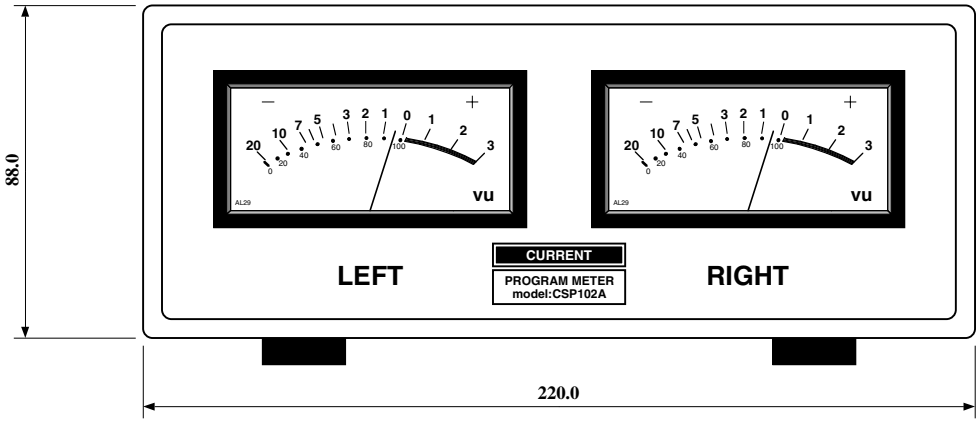

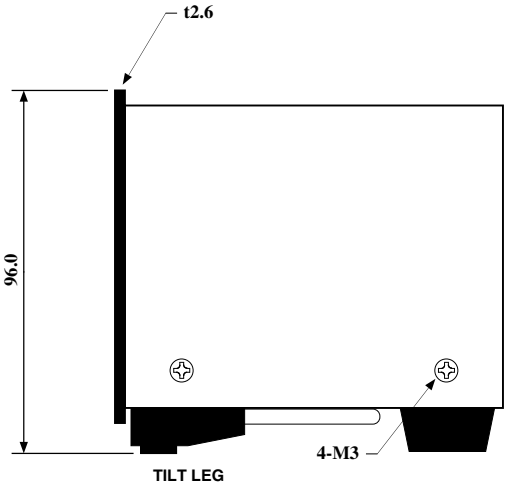

Apr.2003

(c)CURRENT,INC.	PROGRAM METER CSP102A	JUL.2002
H.ICHIHASHI	PANEL DIAGRAM	CSP102A-D

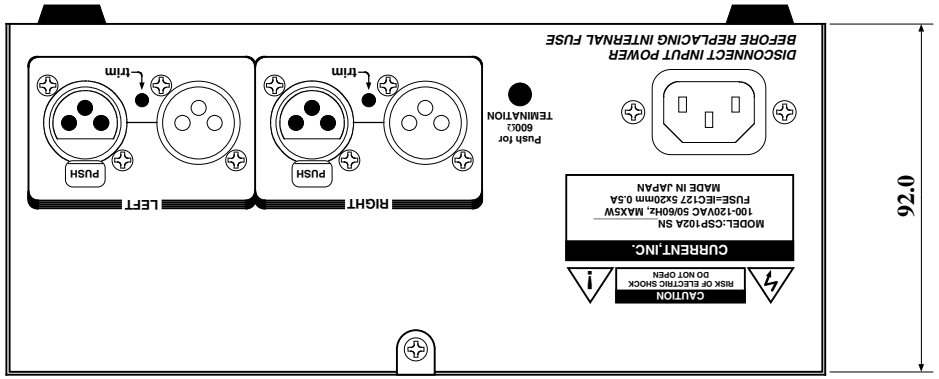

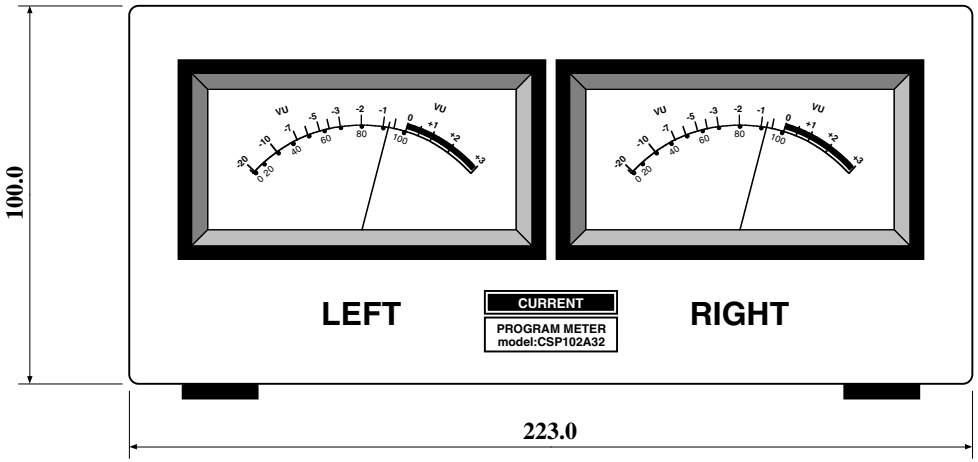

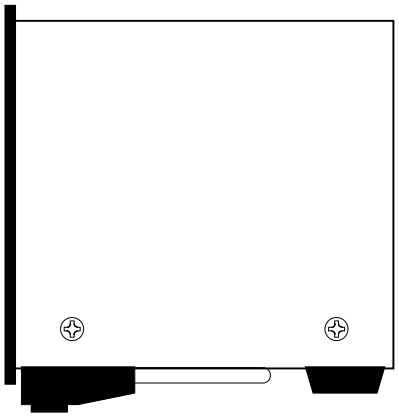

(c)CURRENT,INC.	PROGRAM METER CSP102A32	Oct.2004
H.ICHIHASHI	PANEL DIAGRAM	CSP102A32-D

Program Meter CSP102A

オーディオ入出力
最大入力レベル＋２４ｄＢｕ、２番ホット、２０ｋΩバランス仕様です。入出力は直結されていますのでどちらを入力として使用しても構いません。

Audio inputs and outputs
Maximum +24dBu, hot=2, 20kΩ balanced inputs. Whichever is used as an input, it doesn't care about input and output because it is connected directly.

トリム
－２０ｄＢｕから＋２０ｄＢｕの入力信号を０ＶＵに合わせることが出来ます。出荷時には＋４ｄＢｕに調整されています。なお、調整には計測器が必要です。

trim
The input signal of -20dBu to +20dBu can be adjusted with 0VU.

６００Ωスイッチ
６００Ωラインで使用する場合にはこのスイッチを押し込んで下さい。

600Ω Switch
Push in this switch when you use it on the 600Ω line.

ＡＣ入力
１００～１２０Ｖ、５０／６０Ｈｚで使用してください。
ヒューズは内部にあり、２５０Ｖ　０．５Ａの５ｘ２０ｍｍタイプを使用して下さい。（２００～２４０Ｖはオプションです。）

MAINS Input
Use it in 100 - 120V, 200 - 240V or 50/ 60Hz. The fuse is to be inside, and use a type 5x 20mm of 250V 0.5A. (200 - 240V are optional.)

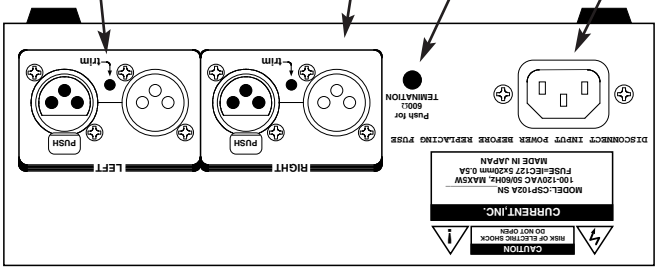

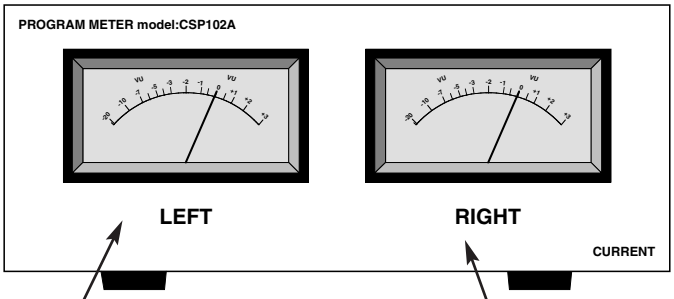

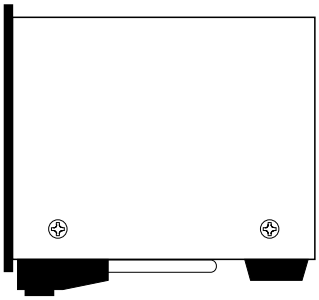

チルトスタンド
前面を持ち上げて設置する場合に使用します。

Tilt Stand
The front is used when it is lifted and installed.

左ＶＵメーター
ＣＳＰ１０２Ａの場合にはＡＬ２９ＷＦ、ＣＳＰ１０２ＡＦの場合にはＲ２２ＡＦが実装されています。

LEFT VU Meter
R22AF is mounted in the case of CSP102A in the case of AL29WF, CSP102AF.

左ＶＵメーター
ＣＳＰ１０２Ａの場合にはＡＬ２９ＷＦ、ＣＳＰ１０２ＡＦの場合にはＲ２２ＡＦが実装されています。

LEFT VU Meter
R22AF is mounted in the case of CSP102A in the case of AL29WF, CSP102AF.