CURRENT PRODUCTS model:CSP178

AUTOMIX

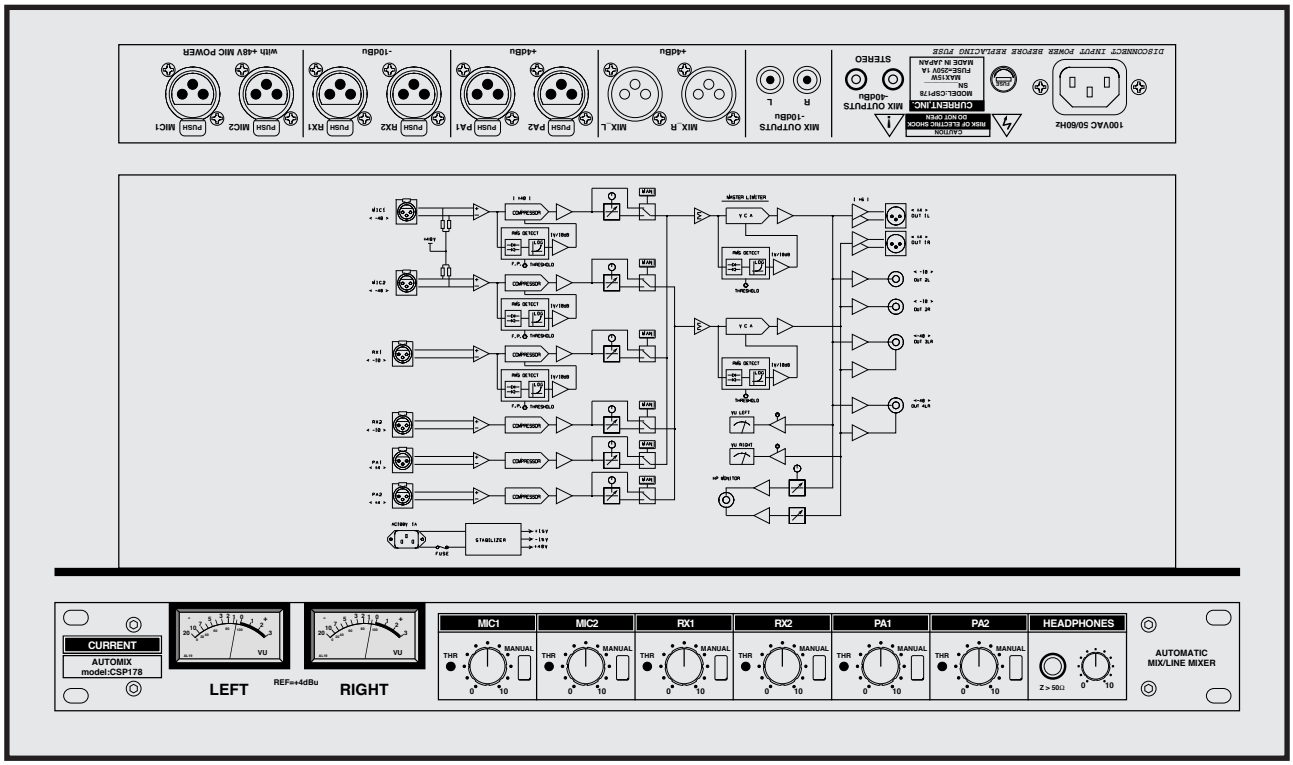


```
6ch input automatic mixer
48V phantom power
Auto, manual
Headphone monitor
VU meter
XLR, RCA, the mini-output
19 inches 1U size
```

CSP178 is 2 mic input and automatic mixer of 4 line input. When signal which it cannot predict is input, compressor, master limiter work and output it with appropriate signal level without being distorted. It is most suitable for live collecting, meeting room, event.

"Input"
MIC1 and MIC2 are mic input with setup gain of 30dB, and, in RX1 and RX2, -10dBu, PA1 and PA2 are line input of +4dBu. It can pre-set threshold level of each compressor individually. Moreover, variable can make in mix level when it turns on "MANUAL" button. This function is equivalent to makeup gain function of compressor.

"Output"
Signal mixed by odd, even input channel is output via master limiter to 1/8" jack for XLR for +4dBu, RCA for -10dBu, -40dBu. It can make mono output by specification at the time of order.

"Monitoring"
It can monitor the mix output with VU meter and headphone.

"Others"
Please consider together in CSP177 of dual microphone preamplifier with distributive function. Further, please refer about automatic amplifier of specifications unlike CSP178.

Example for with wireless system

S P E C I F I C A T I O N S

- **MIC INPUTS 1,2:** BALANCED, 2kΩ, REF=-40dBu, MAX -10dBu
- **LINE INPUTS 3,4:** 2, BALANCED, 20kΩ, REF=-10dBu, MAX +10dBu
- **LINE INPUTS 5,6:** 2, BALANCED, 20kΩ, REF=+4dBu, MAX +24dBu
- **ALL INPUTS CONNECTOR:** XLR3-F
- **XLR OUTPUTS:** BALANCED, 50Ω, REF=+4dBu, MAX +24dBu
- **RCA OUTPUTS: UN**BALANCED, 68Ω, REF=-10dBu, MAX +20dBu
- **MINI OUTPUTS:** BALANCED, 68Ω, REF=-40dBu, MAX +20dBu
- **CONTROL:** MIX LEVEL, MANUAL, THRESHOLD
- **DISPLAY:** VU METER x2
- **HEADPHONES MONITOR:** 1/4" PHONE, STEREO, IMP. > 50Ω
- **FREQUENCY RESPONSE:** 200Hz-20kHz ±1dB
- **THD:** < 0.1% at 1kHz REFERENCE LEVEL
- **NOISE:** < -80dB
- **MAINS:** 100VAC 50/60Hz 15W(MAX)
- **DIMENSIONS:** 482Wx44Hx303D, 4kg

Automix	CSP178	¥640,000

accessory : AC cable,

2-26-11 AKATSUTSUMI, SETAGAYA-KU, TOKYO, 156-0044 JAPAN TEL:81-3-3321-9559 FAX:81-3-5376-2735

The specifications are subject to change without notice.

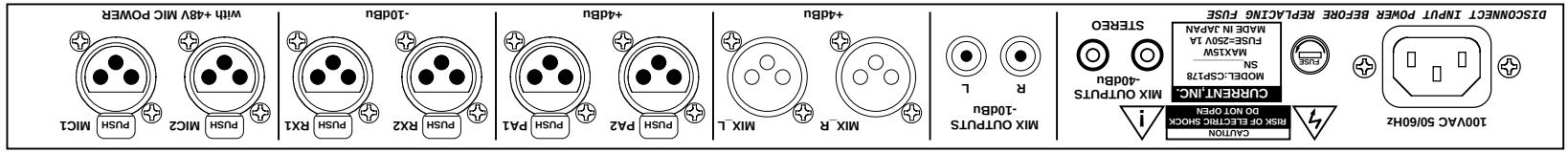

302.6

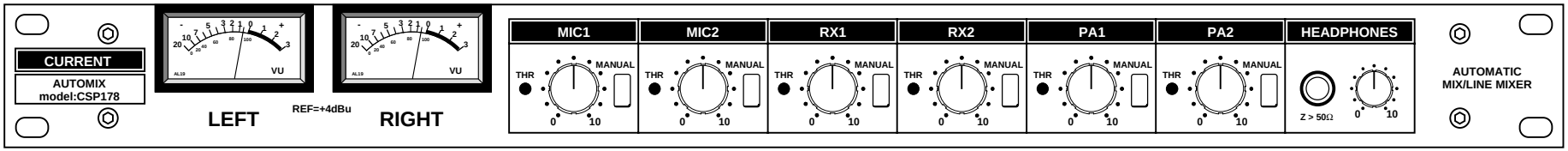

44

482

(c)CURRENT,INC.	AUTOMIX CSP178	JAN.2001
H.ICHIHASHI	PANEL DIAGRAM	CSP178-D

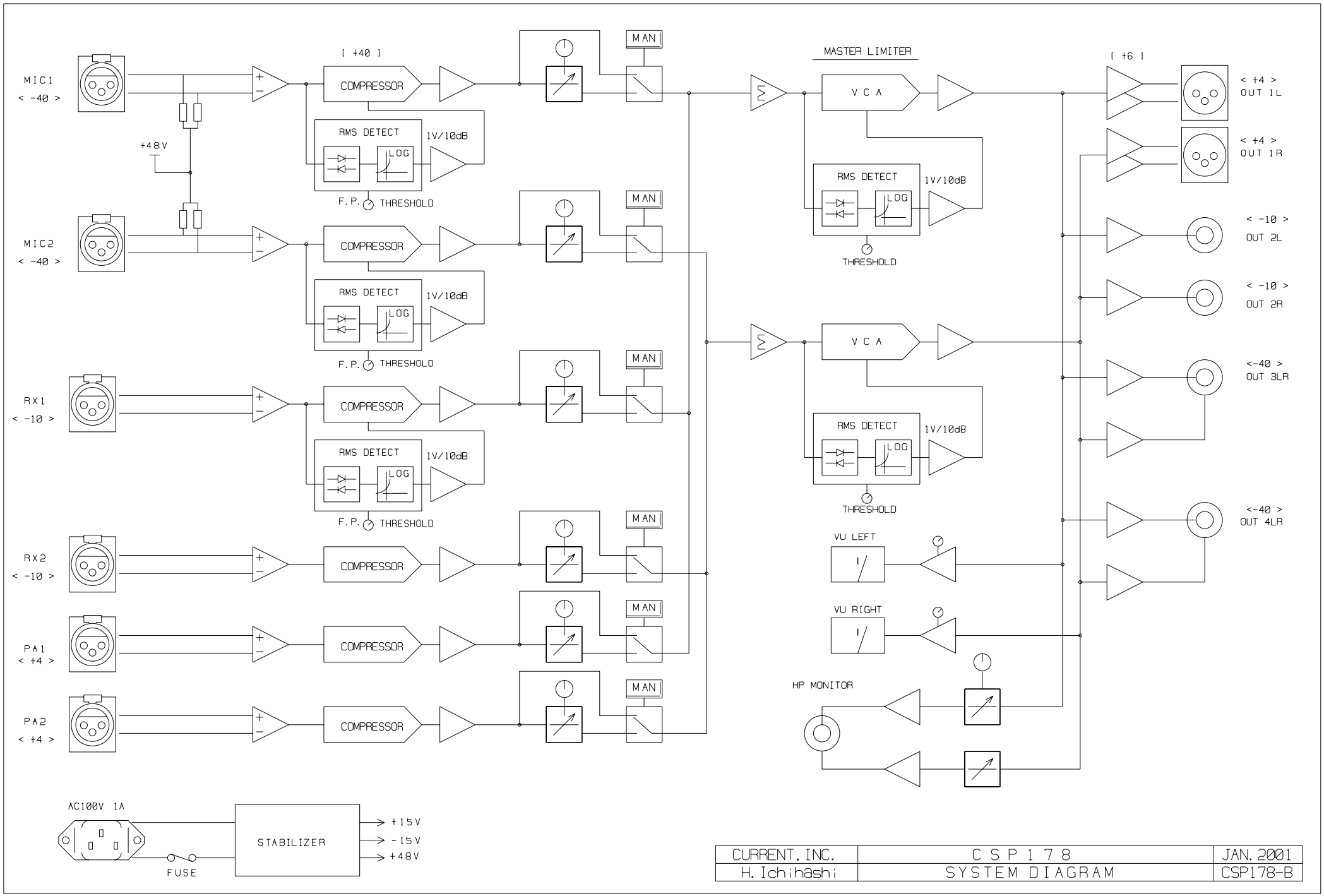

CURRENT, INC.	C S P 1 7 8	JAN. 2001
H. Ichihashi	SYSTEM DIAGRAM	CSP178-B